Accelerometer Wiring
+24 VDC

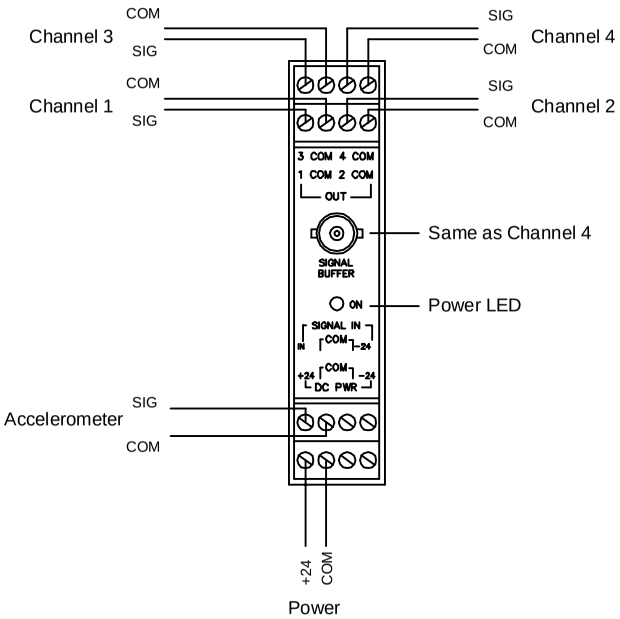

Eddy Probe Wiring
-24 VDC

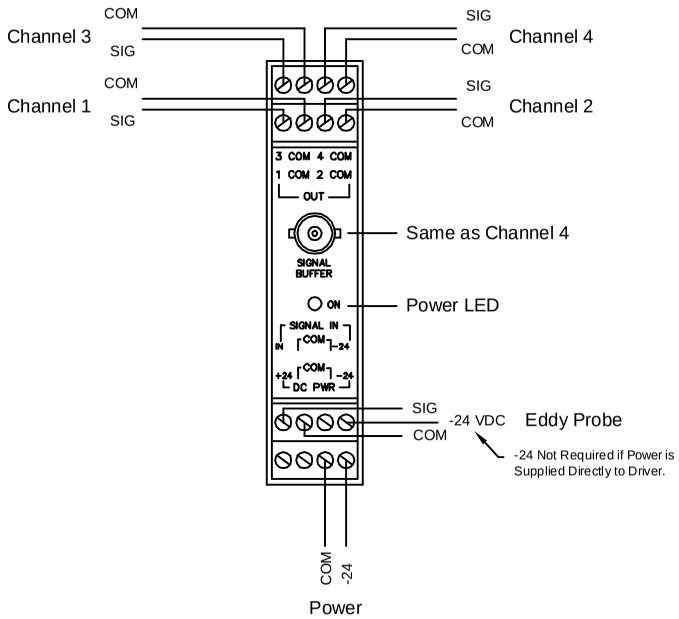

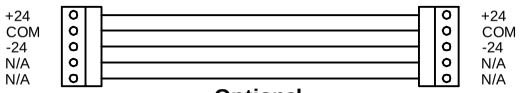

Optional TBus Wiring

Jumper Selection

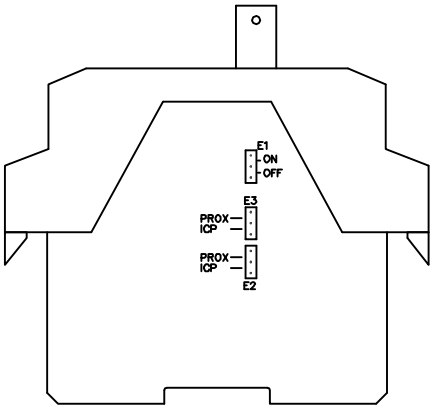

Jumper Selection

Acceleromer Setup w/Sensor Power (CCD)	Acceleromer Setup wo/Sensor Power (CCD)	Proximity or Eddy Probe Setup

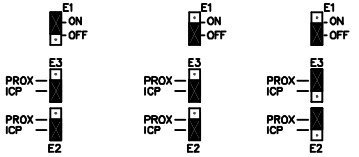

E2 and E3 must be Selected in the Same Position. Damage will result if both +24 and -24 VDC are Supplied and Jumpers are Not in the Same Position.

CMCP797 Active Signal Buffer

REV.	DATE	DRAWN	DESCRIPTION
A			

CUSTOMER	
LOCATION	
ORDER NO.	
SR. NO	

UNLESS OTHERWISE SPECIFIED ALL DIMENSIONS ARE INCHES.

TOLERANCES:
FRACTIONS ± 1/64
DECIMALS .XX ± 0.01, .XXX ± 0.005, .XXXX ± 0.0005
ANGLES ± 1.0

DRAWN FVH	DATE 10/26/10	
CHECK		
ENG.		
MFG.		
APPR.		

STI Vibration Monitoring Inc.
League City, TX

CMCP797 Active Signal Buffer

SIZE	DWG. NO.	REV.
A	CMCP797 Setup V1.3.dwg	A

SCALE: NONE | SHEET 1 OF 1